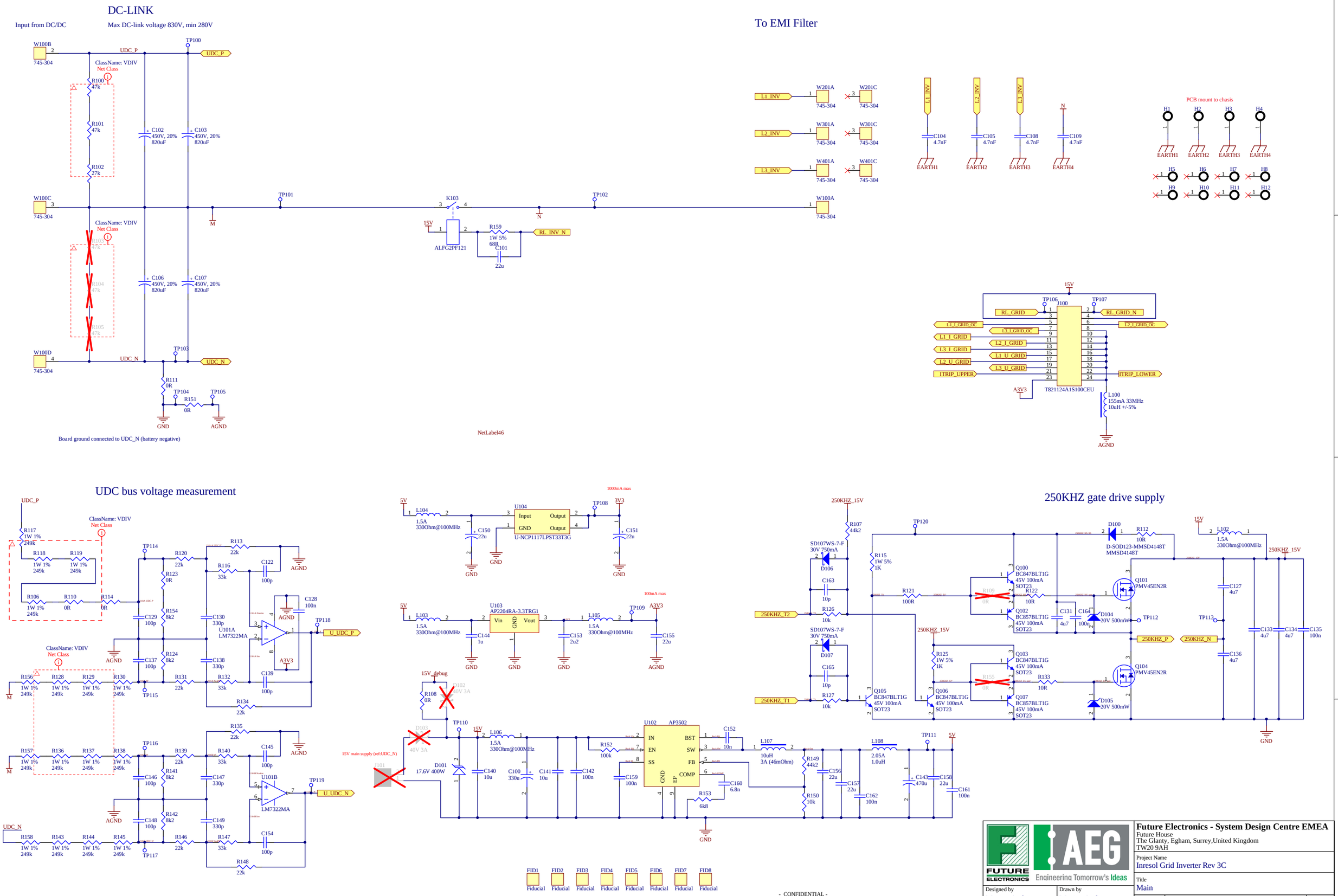
DC-LINK
Input from DC/DC
Max DC-link voltage 830V, min 280V
To EMI Filter
W100B
745-304
UDC_P
TP100
ClassName: VDIV
Net Class
R100 47k
R101 47k
R102 27k
C102 450V, 20% 820uF
C103 450V, 20% 820uF
W100C
TP101
K103
ALFG2PF121
15V
R159 1W 5% 68R
C101 22u
RL_INV_N
TP102
W100A
M
N
R103 47k
R104 47k
R105 47k
C106 450V, 20% 820uF
C107 450V, 20% 820uF
W100D
UDC_N
TP103
R111 0R
TP104
R151 0R
TP105
GND
AGND
Board ground connected to UDC_N (battery negative)
NetLabel46
L1_INV
L2_INV
L3_INV
W201A
W201C
W301A
W301C
W401A
W401C
C104 4.7nF
C105 4.7nF
C108 4.7nF
C109 4.7nF
EARTH1
EARTH2
EARTH3
EARTH4
PCB mount to chasis
H1
H2
H3
H4
H5
H6
H7
H8
H9
H10
H11
H12
RL_GRID
RL_GRID_N
L1_I_GRID_OC
L2_I_GRID_OC
L3_I_GRID_OC
L1_I_GRID
L2_I_GRID
L3_I_GRID
L1_U_GRID
L2_U_GRID
L3_U_GRID
ITRIP_UPPER
ITRIP_LOWER
TP106
TP107
J100
T821124A1S100CEU
A3V3
L100 155mA 33MHz 10uH +/-5%
UDC bus voltage measurement
R117 1W 1% 249k
R118 1W 1% 249k
R119 1W 1% 249k
R106 1W 1% 249k
R110 0R
R114 0R
R120 22k
R113 22k
R116 33k
R122 100p
R123 0R
R154 8k2
C128 100n
C129 100p
C130 330p
U101A LM7322MA
TP118
U_UDC_P
TP114
C137 100p
R124 8k2
C138 330p
C139 100p
A3V3
R156 1W 1% 249k
R128 1W 1% 249k
R129 1W 1% 249k
R130 1W 1% 249k
R131 22k
R132 33k
TP115
R134 22k
R157 1W 1% 249k
R136 1W 1% 249k
R137 1W 1% 249k
R138 1W 1% 249k
R139 22k
R140 33k
R135 22k
C145 100p
TP116
C146 100p
R141 8k2
C147 330p
U101B LM7322MA
TP119
U_UDC_N
R148 22k
C154 100p
R142 8k2
C148 100p
R149 330p
R147 33k
R146 22k
TP117
R158 1W 1% 249k
R143 1W 1% 249k
R144 1W 1% 249k
R145 1W 1% 249k
L104 1.5A 330Ohm@100MHz
U104 U-NCP1117LPST33T3G
Input
Output
GND
TP108
3V3
C150 22u
C151 22u
1000mA max
L103 1.5A 330Ohm@100MHz
U103 AP2204RA-3.3TRG1
Vin
Vout
C144 1u
C153 2u2
L105 1.5A 330Ohm@100MHz
TP109
C155 22u
100mA max
15V_debug
R108 0R
D102 40V 3A
D103 40V 3A
TP110
15V
L106 1.5A 330Ohm@100MHz
D101 17.6V 400W
C140 10u
C100 330u
C141 10u
C142 100n
R152 100k
C159 100n
U102 AP3502
IN
EN
SS
BST
SW
FB
COMP
EP
C152 10n
C160 6.8n
R153 6k8
15V main supply (ref:UDC_N)
U101
L107 10uH 3A (46mOhm)
R149 44k2
R150 10k
C156 22u
C157 22u
C162 100n
L108 2.05uH 1.0uH
TP111
5V
C143 470u
C158 22u
C161 100n
250KHZ gate drive supply
250KHZ_15V
R107 44k2
SD107WS-7-F 30V 750mA
D106
C163 10p
R126 10k
250KHZ_T2
R115 1W 5% 1K
TP120
R121 100R
R109 0R
Q100 BC847BLT1G 45V 100mA SOT23
Q102 BC857BLT1G 45V 100mA SOT23
R122 10R
C131 4u7
C164 100n
D104 20V 500mW
D100 D-SOD123-MMSD4148T MMSD4148T
R112 10R
Q101 PMV45EN2R
TP112
250KHZ_P
250KHZ_N
L102 1.5A 330Ohm@100MHz
C127 4u7
TP113
C133 4u7
C134 4u7
C135 100n
C136 4u7
D107
C165 10p
R127 10k
250KHZ_T1
R125 1W 5% 1K
Q105 BC847BLT1G 45V 100mA SOT23
Q106 BC847BLT1G 45V 100mA SOT23
R155 0R
Q103 BC847BLT1G 45V 100mA SOT23
Q107 BC857BLT1G 45V 100mA SOT23
R133 10R
Q104 PMV45EN2R
D105 20V 500mW
FID1
FID2
FID3
FID4
FID5
FID6
FID7
FID8
Fiducial
- CONFIDENTIAL -
THIS DRAWING CONTAINS PROPRIETARY INFORMATION WHICH MAY NOT BE DISCLOSED TO OTHERS FOR ANY PURPOSE WHATSOEVER OR USED FOR MANUFACTURING PURPOSES WITHOUT PRIOR WRITTEN PERMISSION FROM THE FUTURE ELECTRONICS CORPORATION.
FUTURE ELECTRONICS
AEG
Engineering Tomorrow's Ideas
Future Electronics - System Design Centre EMEA
Future House
The Glanty, Egham, Surrey,United Kingdom
TW20 9AH
Project Name
Inresol Grid Inverter Rev 3C
Title
Main
Designed by
Morten Andersen
Drawn by
Morten Andersen
Checked by
David Woodcock
Approved by
David Woodcock
Size A2
Dwg No. FEN-Prj_No-SCH-R3C
Rev 3C
Date 04/04/2018
Sheet 1 of 5
Variant: FULL_BUILD

L1 halfbridge, LCL filter, voltage and current measurement.

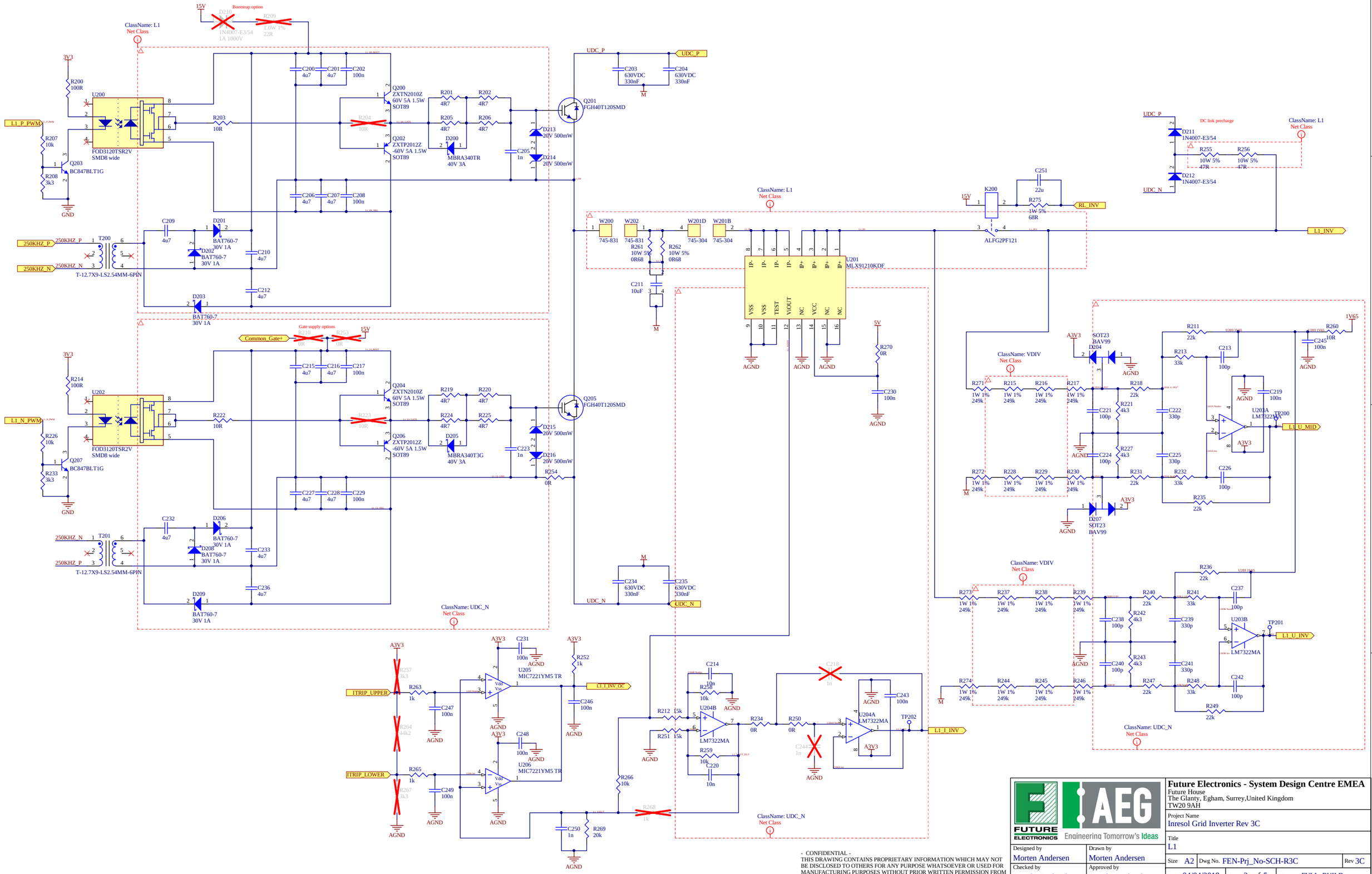

- CONFIDENTIAL -
THIS DRAWING CONTAINS PROPRIETARY INFORMATION WHICH MAY NOT BE DISCLOSED TO OTHERS FOR ANY PURPOSE WHATSOEVER OR USED FOR MANUFACTURING PURPOSES WITHOUT PRIOR WRITTEN PERMISSION FROM THE FUTURE ELECTRONICS CORPORATION.

Future Electronics - System Design Centre EMEA
Future House
The Glanty, Egham, Surrey,United Kingdom
TW20 9AH

FUTURE ELECTRONICS — AEG Engineering Tomorrow's Ideas

Project Name	Inresol Grid Inverter Rev 3C
Title	L1
Size	A2
Dwg No.	FEN-Prj_No-SCH-R3C
Rev	3C
Date	04/04/2018
Sheet	2 of 5
Variant	FULL_BUILD
Designed by	Morten Andersen
Drawn by	Morten Andersen
Checked by	David Woodcock
Approved by	David Woodcock

L2 halfbridge, LCL filter, voltage and current measurement.

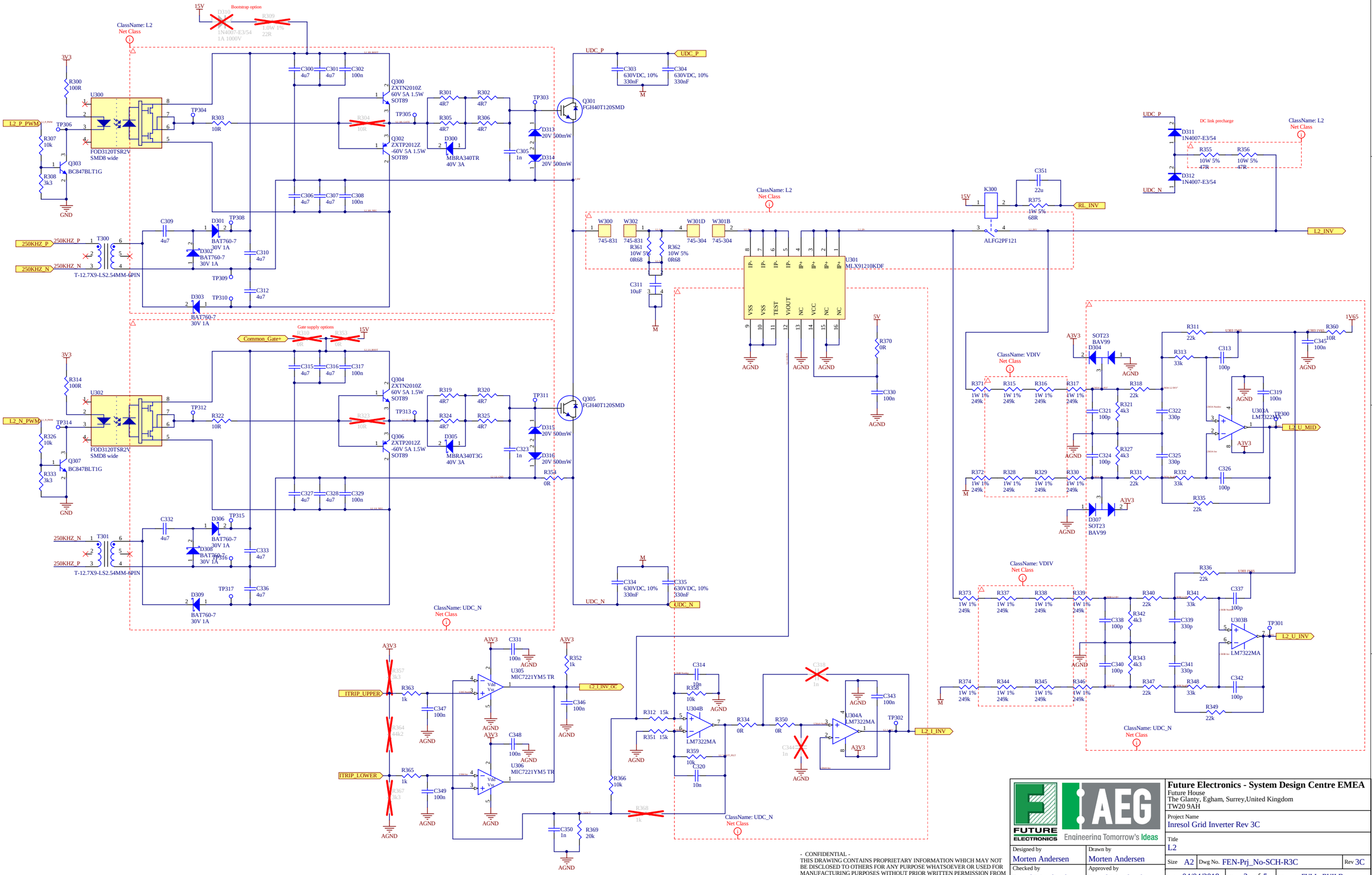

- CONFIDENTIAL -
THIS DRAWING CONTAINS PROPRIETARY INFORMATION WHICH MAY NOT BE DISCLOSED TO OTHERS FOR ANY PURPOSE WHATSOEVER OR USED FOR MANUFACTURING PURPOSES WITHOUT PRIOR WRITTEN PERMISSION FROM THE FUTURE ELECTRONICS CORPORATION.

FUTURE ELECTRONICS / AEG Engineering Tomorrow's Ideas	**Future Electronics - System Design Centre EMEA** Future House The Glanty, Egham, Surrey,United Kingdom TW20 9AH	
	Project Name: Inresol Grid Inverter Rev 3C	
	Title: L2	
Designed by: Morten Andersen	Drawn by: Morten Andersen	Size A2 · Dwg No. FEN-Prj_No-SCH-R3C · Rev 3C
Checked by: David Woodcock	Approved by: David Woodcock	Date 04/04/2018 · Sheet 3 of 5 · Variant: FULL_BUILD

L3 halfbridge, LCL filter, voltage and current measurement.

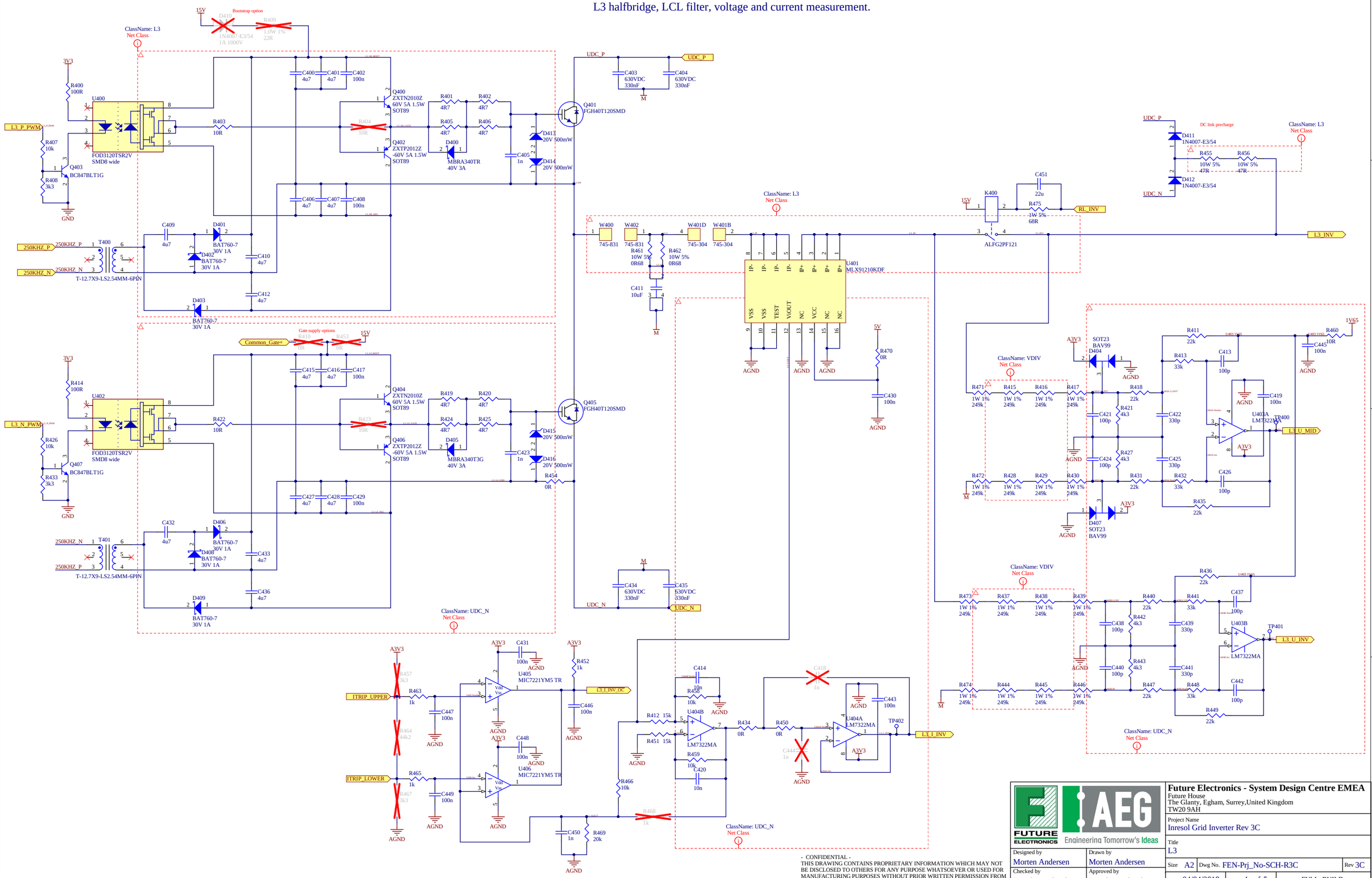

- CONFIDENTIAL -
THIS DRAWING CONTAINS PROPRIETARY INFORMATION WHICH MAY NOT BE DISCLOSED TO OTHERS FOR ANY PURPOSE WHATSOEVER OR USED FOR MANUFACTURING PURPOSES WITHOUT PRIOR WRITTEN PERMISSION FROM THE FUTURE ELECTRONICS CORPORATION.

FUTURE ELECTRONICS — AEG Engineering Tomorrow's Ideas

Future Electronics - System Design Centre EMEA
Future House
The Glanty, Egham, Surrey,United Kingdom
TW20 9AH

Project Name	Inresol Grid Inverter Rev 3C
Title	L3
Designed by	Morten Andersen
Drawn by	Morten Andersen
Checked by	David Woodcock
Approved by	David Woodcock
Size	A2
Dwg No.	FEN-Prj_No-SCH-R3C
Rev	3C
Date	04/04/2018
Sheet	4 of 5
Variant:	FULL_BUILD

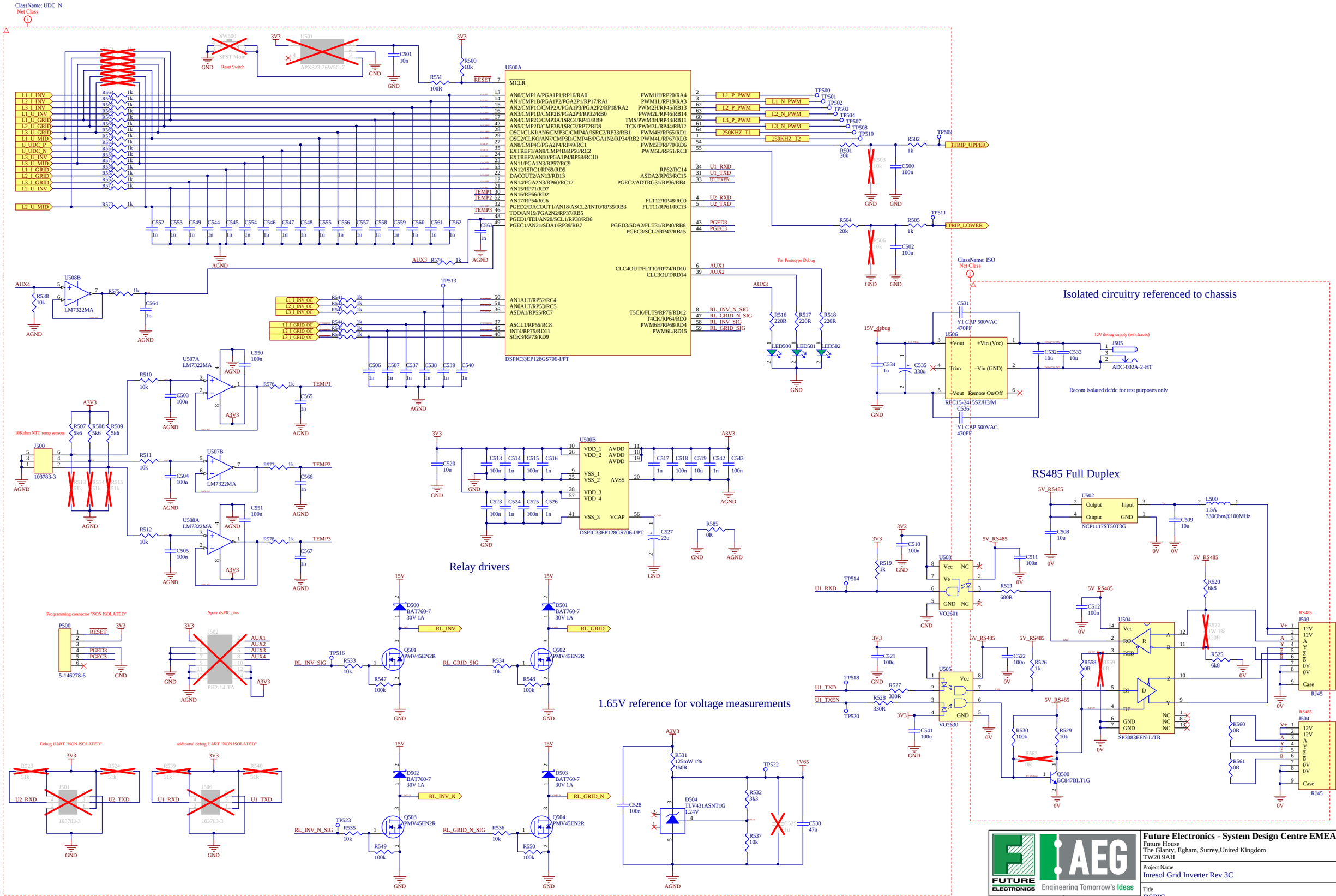

- CONFIDENTIAL -
THIS DRAWING CONTAINS PROPRIETARY INFORMATION WHICH MAY NOT BE DISCLOSED TO OTHERS FOR ANY PURPOSE WHATSOEVER OR USED FOR MANUFACTURING PURPOSES WITHOUT PRIOR WRITTEN PERMISSION FROM THE FUTURE ELECTRONICS CORPORATION.

Future Electronics - System Design Centre EMEA
Future House
The Glanty, Egham, Surrey,United Kingdom
TW20 9AH

Project Name: Inresol Grid Inverter Rev 3C

Title: DSPIC

Designed by: Morten Andersen	Drawn by: Morten Andersen	Size: A2	Dwg No. FEN-Prj_No-SCH-R3C	Rev 3C
Checked by: David Woodcock	Approved by: David Woodcock	Date: 04/04/2018	Sheet 5 of 5	Variant: FULL_BUILD